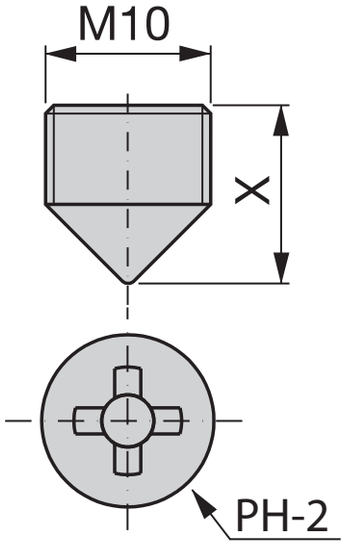
M10
X
PH-2