emuca
where creation begins

OPTION 1 (1x)

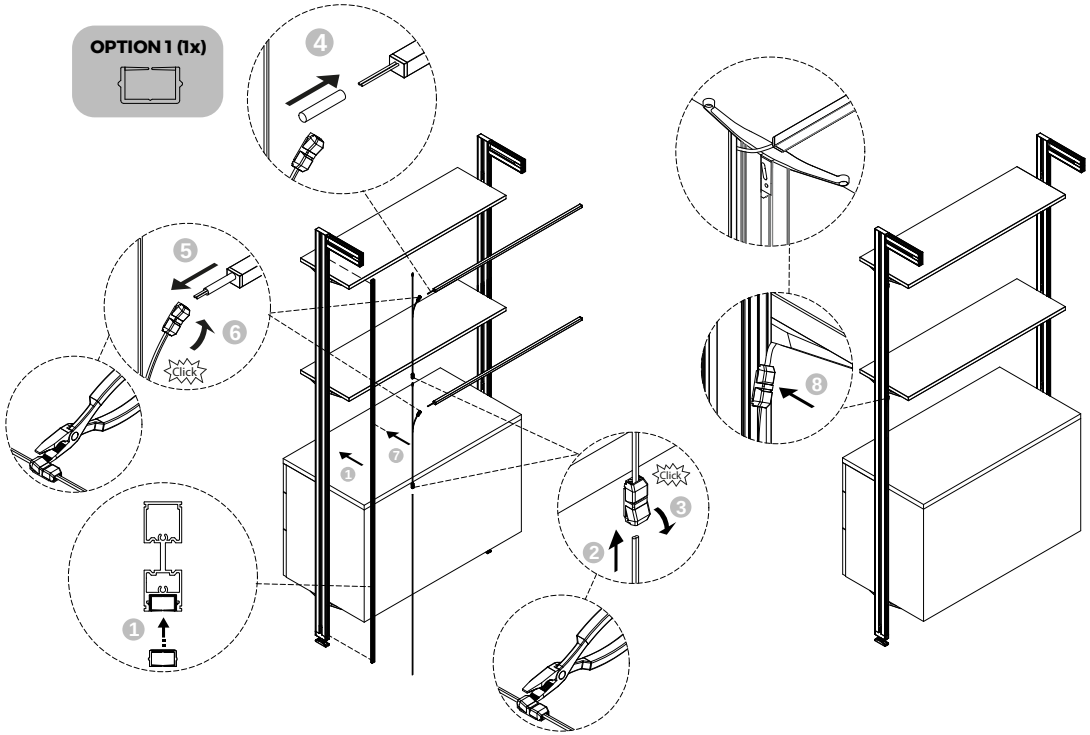

OPTION 2 (1x)

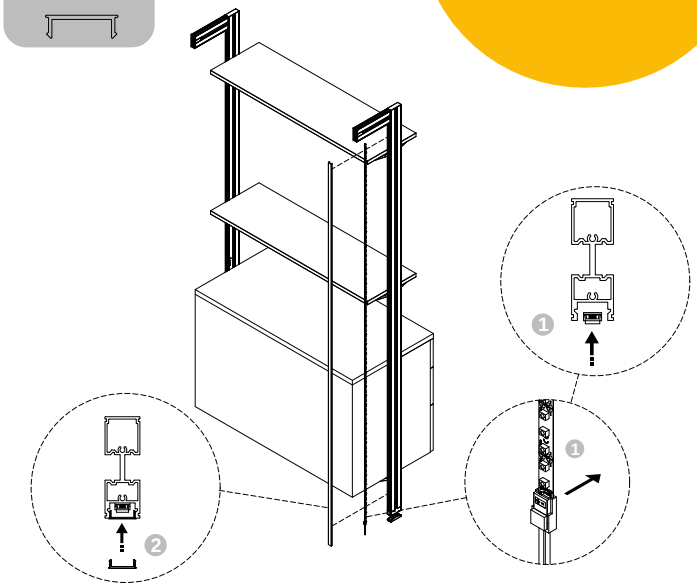

OPTION 1 (2x)

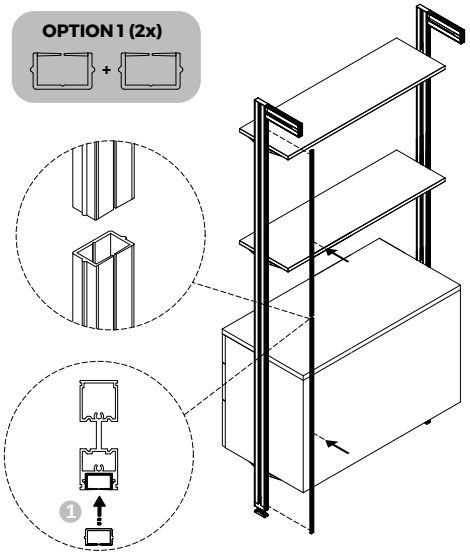
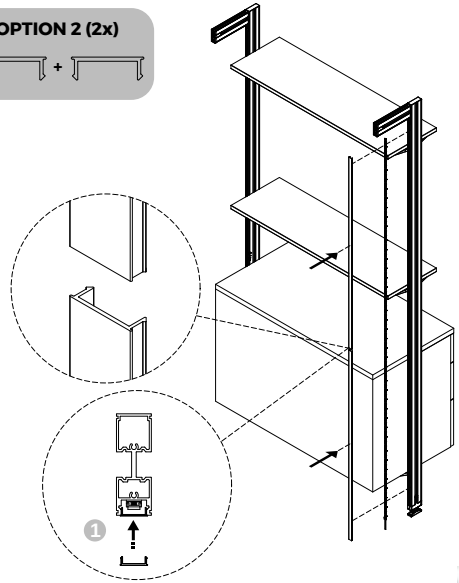
OPTION 2 (2x)