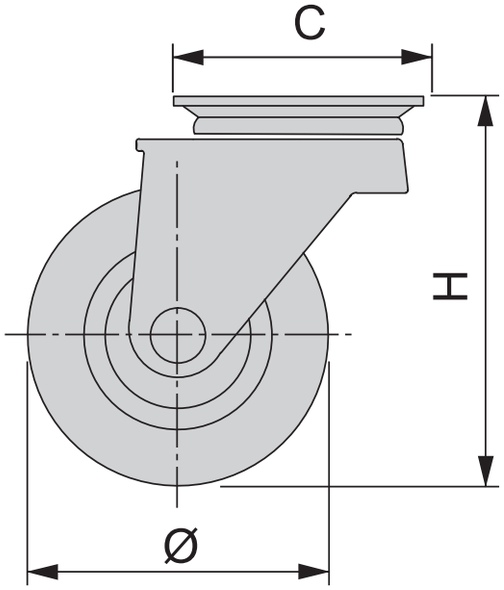
C
H
Ø

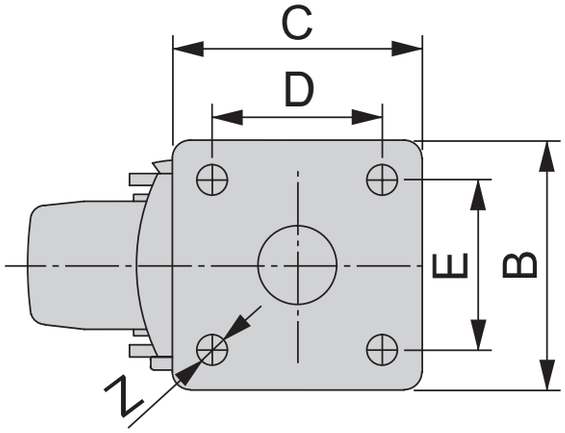
C
D
E
B
N